40 PIN SMD ETHERNET 10/100 BASE QUAD PORT TRANSFORMER

PN/:40ST1041E DATA SHEET

A.GENERAL SPECIFICATIONS

1.IEEE 802.3 ETHERNET COMPATIABLE, 100 BASE-TX
2.SURFACE MOUNTABLE
3.DESIGN FOR MULTIPORT REPEATER AND ETHERNET SWITCHING HUB APPLICATION
4.CUSTOMER DESIGNS AVAILABLE FOR SPECIFIC APPLICATION
5.OPERATING TEMP RANGE: 0°C TO 100°C.

B.ELECTRICAL SPECIFICATIONS@25°C

1.ISOLATION HI-POT: 1500 Vrms (PRI. /SEC.)
2.TURN RATIO (±5%): TX=1CT: 1CT, RX=1:1
3.RISE TIME: 2.5 ns TYP
4.CW/W: 28 pF MAX
5.LEAKAGE INDUCTANCE (1MHz): 0.45uH Max
6.CMRR (0.1-100 MHz): -37dB MIN
7.RETUTN LOSS (MIN): 5-30 MHz 30-60 MHz 60-80 MHz
-16dB -12dB -10 dB
8.CROSSTALKS (0.1 TO 100MHz): -38dB Min
9.OCL (uH,Min):350 uH, at 8mA /dc FORM 0-70°C
10.DCR: 0.9 Max
11. INSERTION LOSS (1MHz-100MHz): -1.15dB MAX
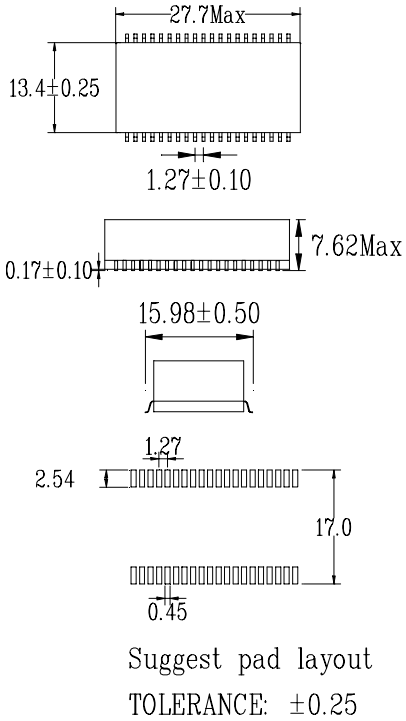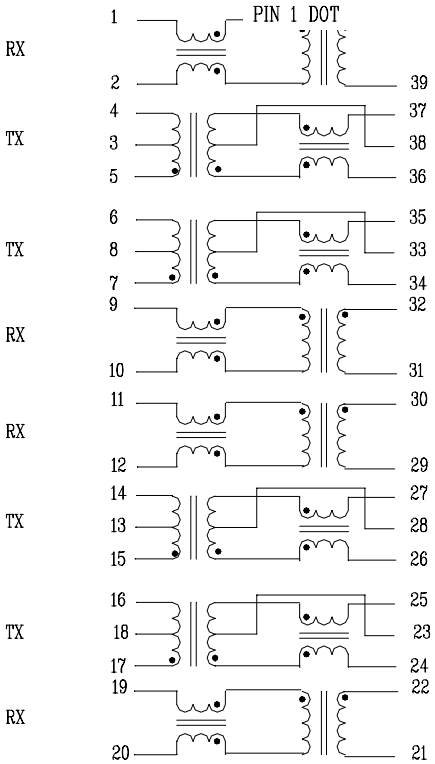
C.SCHEMATIC & DIMENSIONS & MARKING (UNIT mm):