10/100 PC CARD LAN MAGNETICS SOLUTIONS

P/N: NS0019 DATA SHEET

Feature

- Half port and single port designs for maximum layout flexibility.
- Low profile packages from 0.094 Inch(2.39mm) to 0.078 Inch(1.98mm) for PC card and card bus applications.
- TX OCL 350uH min. with 8mA Bias.
- Operation temperature range: 0℃ to +70℃.
- Storage temperature range: -25℃ to +125℃.

Electrical Specifications @ 25°C

Part Number	Turns Ratio (±5%)		Insertion Loss (dB Max)TX/RX	OCL (uH Min) @ 100KHz/0.1V with 8mA DC Bias		HI-POT (Vrms)
	TX	RX	0.3-100MHz	Pin(16-15)	Pin(7-8)	
NS0019	1CT:1CT		-1.4/-1.1	200	350	1500

Continue

Part Number	Return Loss (dB Min)TX/RX			Cross talk (dB Min)			DCMR (dB Min)	
	30MHz	60MHz	80MHz	30MHz	62MHz	100MHz	30MHz	100MHz
NS0019	-14/-16	-11/-12	-10/-11	-45	-40	-35	-40	-30

Schematic

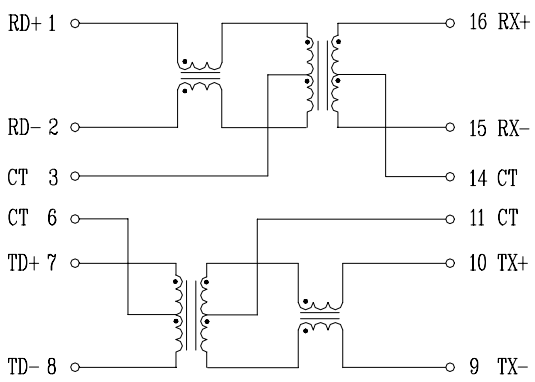

Mechanical

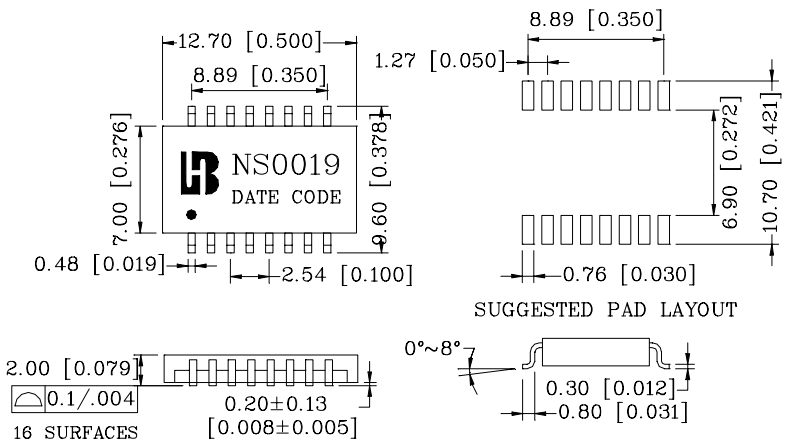

Units: mm[Inches] Tolerances: xx.x0±0.25[0.010]
0.xx±0.05[0.002]